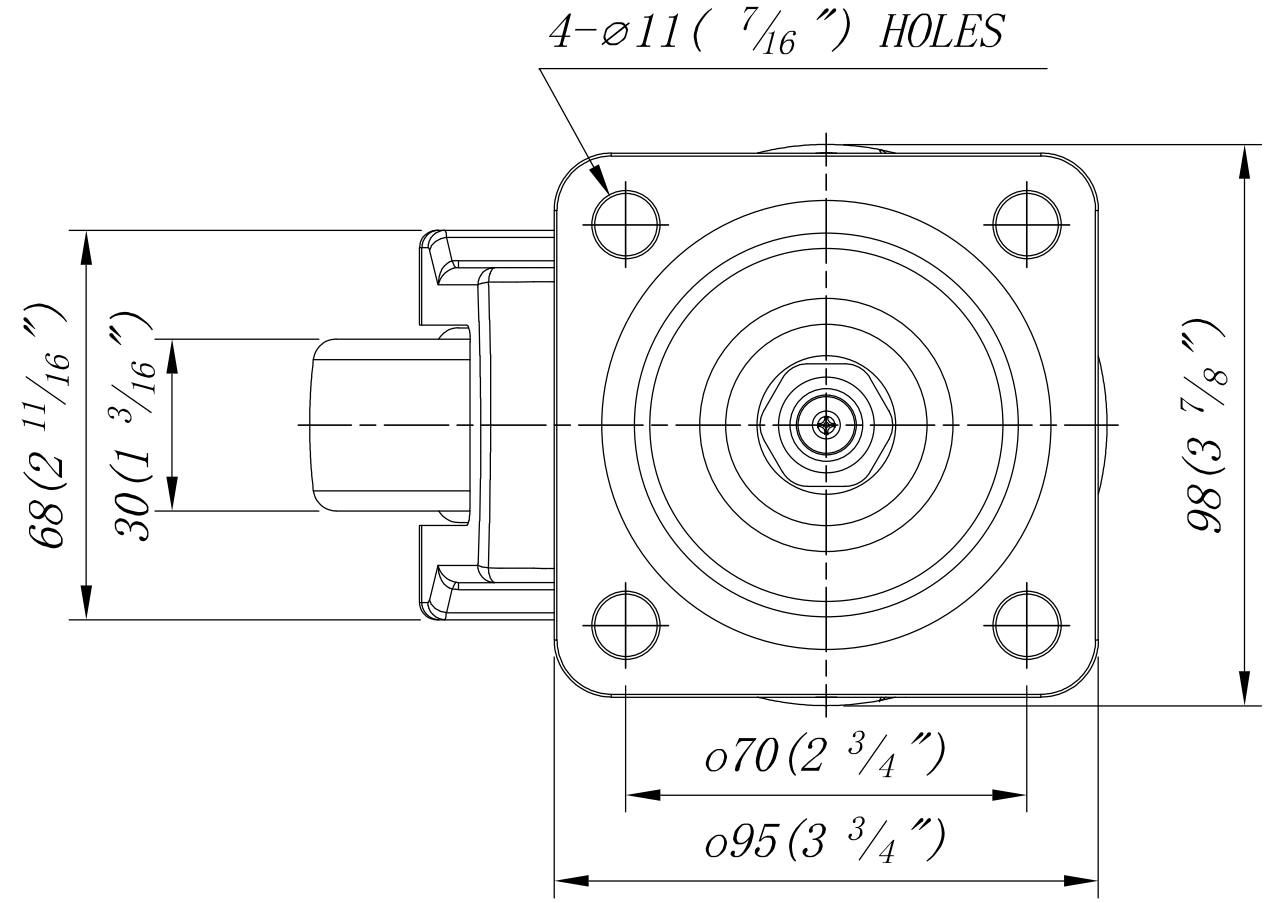
4-⌀11(7/16 ″) HOLES
68(2 11/16 ″)
30(1 3/16 ″)
98(3 7/8 ″)
o70(2 3/4 ″)
o95(3 3/4 ″)

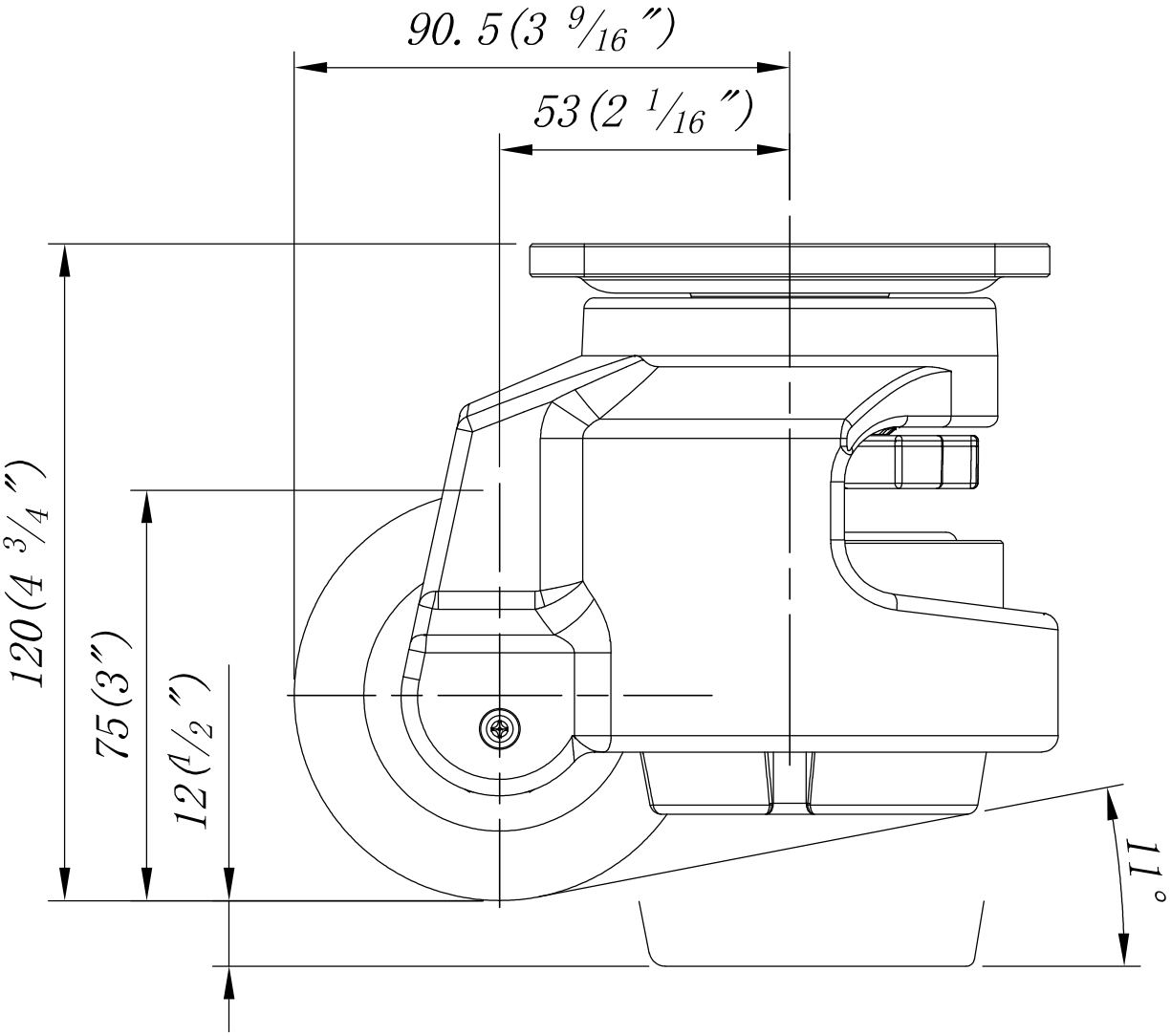
90. 5(3 9/16 ″)
53(2 1/16 ″)
120(4 3/4 ″)
75(3″)
12(1/2 ″)
11°