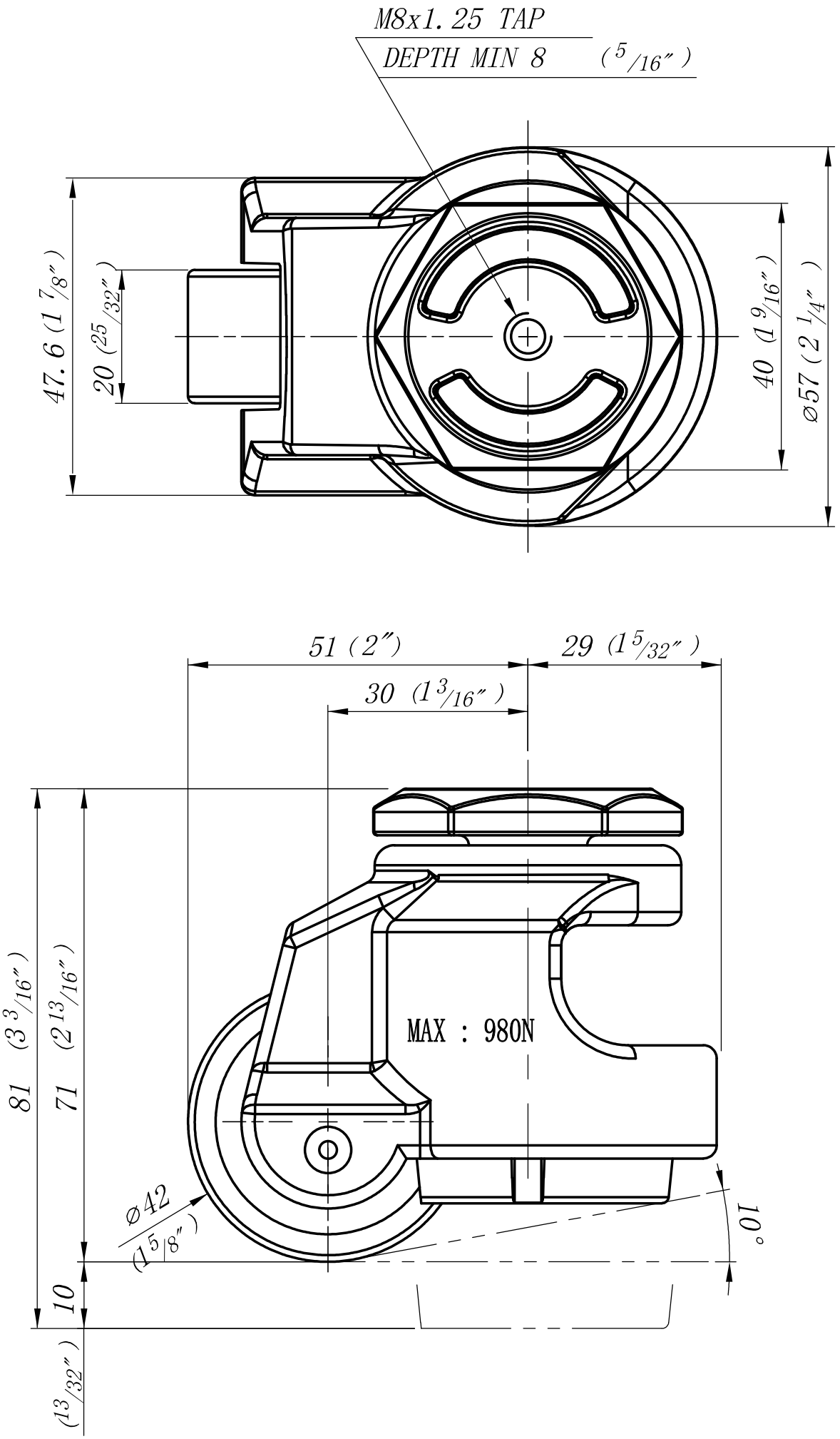
M8x1.25 TAP
DEPTH MIN 8 (5/16")
47.6 (1 7/8")
20 (25/32")
40 (1 9/16")
ø57 (2 1/4")
51 (2")
29 (1 5/32")
30 (1 3/16")
81 (3 3/16")
71 (2 13/16")
MAX : 980N
ø42
(1 5/8")
10°
10
(13/32")